lumbergautomation
A BELDEN BRAND

Product: RKC 30/11

7/8" - Female 0° | #Contacts: 3 | 600 V | Black Housing, Black PG11 Cable Gland | cURus

Product Description

7/8" - Field Attachable Female Straight Connector | #Contacts: 3 (2+PE) | 600 V / 12 A | Black Housing, Black PG11 Cable Gland | cURus

Technical Drawing

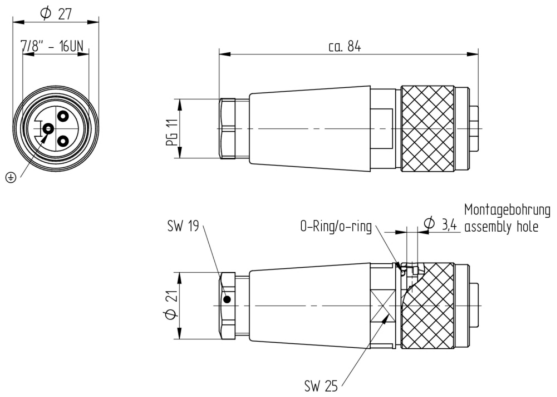

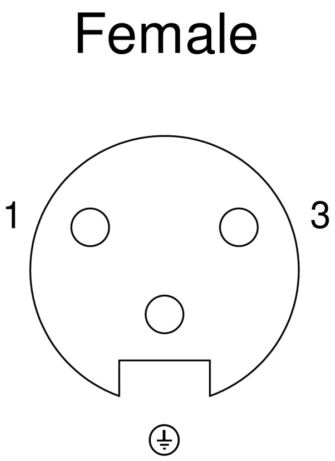

Technical Specifications

Technical Data

Product Family:	Power Connector
Side 1 Product Sub Family:	7/8" (2, 3, 4, 5, 6 contacts)
Brand:	Lumberg Automation
Connector Type:	Field Attachable
Connector Sub Type:	7/8"
Side 1 Type of Contact/Gender:	Socket Contacts / Female
Connector Design:	7/8" | Female | 3 Pole | 0°
Number of Pins:	3 (2+PE)
Coding, Side 1:	A
Shielding Type:	Unshielded
Attachment Type:	Female Thread (coupling nut)
Voltage Rating:	250 V (IEC Standard)
Rated Voltage (UL):	600 V
Current Rating:	12 A
Side 1 Contact Resistance:	≤ 10 mOhm
Insulation Resistance:	> 10^9 Ohm
Mating Cycles:	≤ 100
Type of Connection:	Screw terminal
Cable Gland:	PG 11
Cross Section:	max. 1.0 mm²

Suitable Cables:	Ø 8.0-10.0 mm
Ambient Temperature (Operation)*:	- 40 °C to + 90 °C
Protection Degree / IP Rating**:	IP65, IP67
Side 1 Pollution Degree:	3 acc. to DIN EN 60664-1 (VDE 0110-1)

Materials

Contact Base Material:	Brass (CuZn)
Side 1 Contact Plating:	Copper-Gold Alloy (Cu/Au)
Contact Bearer Material:	Thermoplastic Polyurethane (TPU)
Contact Bearer Color:	Black
Housing Material:	Nylon 66 (PA 66)
Housing Color:	Black
Cable Gland Material:	Nylon 66 (PA 66)
Cable Gland Gasket:	Nitrile Butadiene Rubber (NBR)
Cable Gland Color:	Black
Attachment Material:	Aluminum (Al)
Attachment Plating:	Anodized black
O-Ring Material:	Nitrile Butadiene Rubber (NBR)

Approvals

UL-File:	E104696
UL:	UL 2238; cURus

Safety & Environmental Compliance

RoHS Compliant:	Compliant

Notes

Note Derating:	* Notice derating
Protection Degree / IP Rating Note:	IP Rating tested according to IEC standard using combination of a Hirschmann or Lumberg Automation connector mounted and locked
Note:	Do not connect / disconnect under load.

Variants

Item #	Item Description	Cable Gland Material
11206	RKC 30/11	Nylon 66 (PA 66)

© 2026 Belden, Inc

All Rights Reserved.

Although Belden makes every reasonable effort to ensure their accuracy at the time of this publication, information and specifications described here in are subject to error or omission and to change without notice, and the listing of such information and specifications does not ensure product availability.

Belden provides the information and specifications herein on an "ASIS" basis, with no representations or warranties, whether express, statutory or implied. In no event will Belden be liable for any damages (including consequential, indirect, incidental, special, punitive, or exemplary damages) whatsoever, even if Belden has been advised of the possibility of such damages, whether in an action under contract, negligence or any other theory, arising out of or in connection with the use, or inability to use, the information or specifications described herein.

All sales of Belden products are subject to Belden's standard terms and conditions of sale.

Belden believes this product to be in compliance with all applicable environmental programs as listed in the data sheet. The information provided is correct to the best of Belden's knowledge, information and belief at the date of its publication. This information is designed only as a general guide for the safe handling, storage, and any other operation of the product itself or the one that it becomes a part of. The Product Disclosure is not to be considered a warranty or quality specification. Regulatory information is for guidance purposes only. Product users are responsible for determining the applicability of legislation and regulations based on their individual usage of the product.