REV.	DATE	ECR NO.	DESCRIPTION
NC	11/15/11	XXXXXX	INITIAL RELEASE

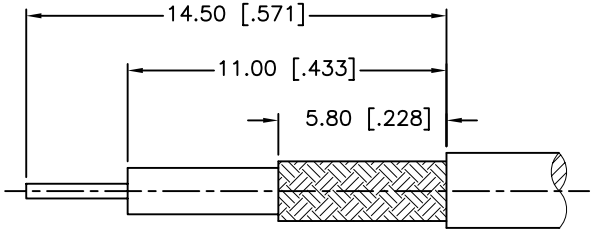

RECOMMENDED
CABLE STRIPPING DIM'S

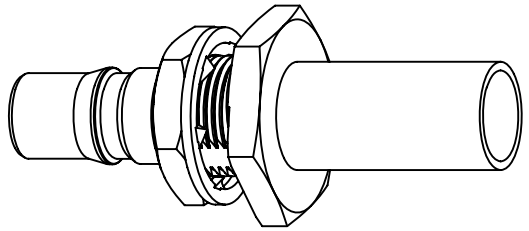

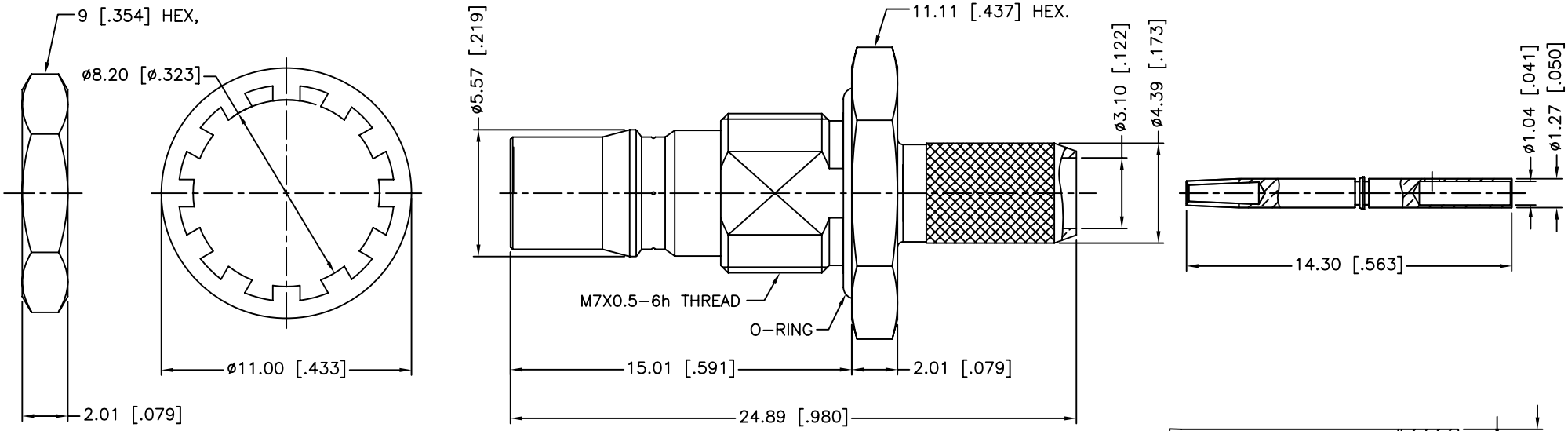

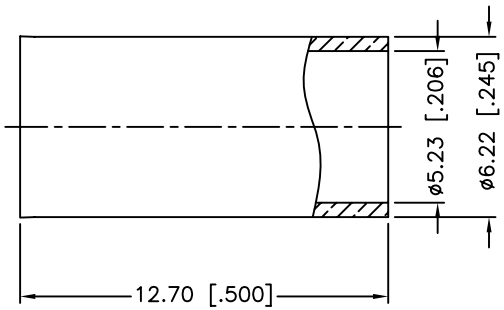

1. IMPEDANCE: 50 OHM
2. FREQUENCY RANGE: DC – 11 GHz
3. VSWR(RETURN LOSS): 1.22 (20 dB) MAX 0–6 GHz
   1.29 (18 dB) MAX 6–11 GHz
4. DIELECTRIC WITHSTANDING VOLTAGE: 1000 VRMS, MIN.
5. DURABILITY: 100 CYCLES MIN.
6. TEMPERATURE RANGE: –40°C TO +85°C
7. PACKAGING:
   A. QUANTITY: SINGLE PACK
   B. MARKING: BAG TO BE MARKED
   "AMPHENOL, 134106, AND DATE CODE"
8. CRIMPED FERRULE
   HEX. CRIMP SIZE .213"
9. CONTACT PIN TO SOLDER
10. MAX. PANEL THICKNESS=2.5mm
11. INSULATOR MUST WITHSTAND A 6 LBS. MIN.
    AXIAL FORCE AFTER STAKING OPERATION

	DESCRIPTION	MATERIAL	FINISH	QTY
7	FERRULE	COPPER	NEXCOTE	1
6	GASKET	SILICONE	RED	1
5	LOCK WASHER	BRASS	NEXCOTE	1
4	HEX NUT	BRASS	NEXCOTE	1
3	CONTACT PIN	BERYLLIUM COPPER	GOLD	1
2	INSULATOR	PTFE	NATURAL	1
1	BODY	BRASS	NEXCOTE	1

UNLESS OTHERWISE SPECIFIED DIMENSIONS ARE IN MILLIMETERS. DIMENSIONS IN [ ] ARE IN INCHES AND FOR CUSTOMER REFERANCE ONLY.

UNLESS OTHERWISE SPECIFIED TOLERANCES FOR MILLIMETERS ARE:
0.5 – 8mm ± 0.20mm
8 – 30mm ± 0.40mm
30 – 120mm ± 0.50mm

UNLESS OTHERWISE SPECIFIED TOLERANCES FOR INCHES ARE:
.020 – .315 = ± 0.007"
.315 – 1.180 = ± 0.015"
1.180 – 4.724 = ± 0.020"

DO NOT SCALE DRAWING

APPROVALS		DATE
DRAWN	M.ZHANG	11/15/11
CHECKED		
ISSUED		
SHEET	1 OF 1	

CAD FILE C:/CONNEX/134106.DWG

Amphenol Connex

PART DESCRIPTION
QMA JACK BULKHEAD – 50 ohm
(FOR RG–58 TYPE CABLE)

PART NO. 134106

DWG. NO. 134106.DWG | REV. NC | SIZE A | SCALE NA