REV.	DATE	DESCRIPTION
A	02/24/03	UPDATE DRAWING FORMAT
B	06/30/07	REVISE BODY LENGTH, CONTACT PIN, FERRULE DIMENSIONS

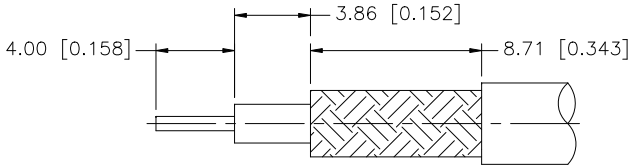

RECOMMENDED
CABLE STRIPPING DIMS.

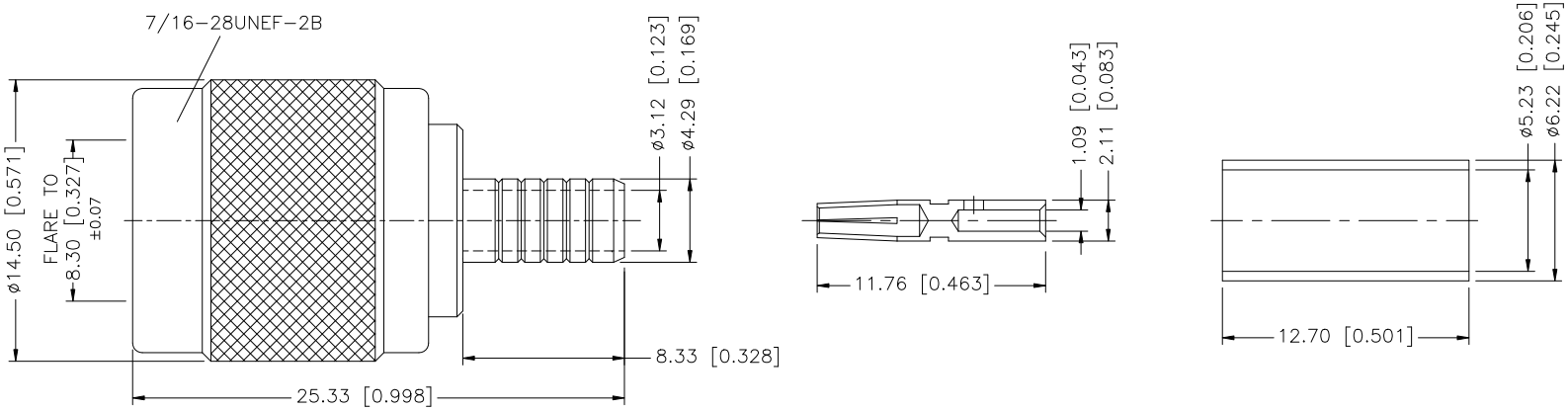

NOTE:

1. CRIMPED FERRULE HEX CRIMP SIZE .213"
2. CRIMPED CONTACT PIN HEX CRIMP SIZE .068"

	DESCRIPTION	MATERIAL	FINISH	QTY
8				
7				
6				
5	FERRULE	COPPER	NICKEL	1
4	GASKET	RUBBER	RED	1
3	CONTACT PIN	PHOS. BRONZE	GOLD	1
2	INSULATOR	TEFLON	NATURAL	1
1	SHELL/BODY	BRASS	NICKEL	1

UNLESS OTHERWISE SPECIFIED DIMENSIONS ARE IN MILLIMETERS. DIMENSIONS IN [ ] ARE IN INCHES AND FOR CUSTOMER REFERANCE ONLY.

UNLESS OTHERWISE SPECIFIED TOLERANCES FOR MILLIMETERS ARE:
0.5 – 8mm ± 0.20mm
8 – 30mm ± 0.40mm
30 – 120mm ± 0.50mm

UNLESS OTHERWISE SPECIFIED TOLERANCES FOR INCHES ARE:
.020 – .315 = ± 0.007"
.315 – 1.180 = ± 0.015"
1.180 – 4.724 = ± 0.020"

DO NOT SCALE DRAWING

APPROVALS		DATE
DRAWN	G.R.S.	06/30/07
CHECKED		
ISSUED		
SHEET	1 OF 1	

CAD FILE C:/122/122108RP.DWG

Amphenol Connex

PART DESCRIPTION
TNC REVERSE POLARITY CRIMP PLUG
(FOR RG-58C/U CABLE)

PART NO. 122108RP

DWG. NO.	REV.	SIZE	SCALE
122108RP.DWG	B	A	NA