REVISIONS					
REV	ECO	DESCRIPTION	DATE	BY	APPR
A1	--	RELEASED DRAWING	AUG-09-16	JARRY	TOMMY
A2	--	UPDATE NOTES	Jun-22-2017	Nick	TOMMY
A3	--	UPDATE CABLE OD RANGE	Aug-24-2017	Nick	TOMMY

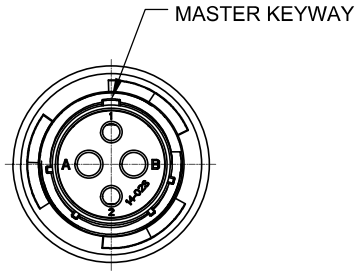

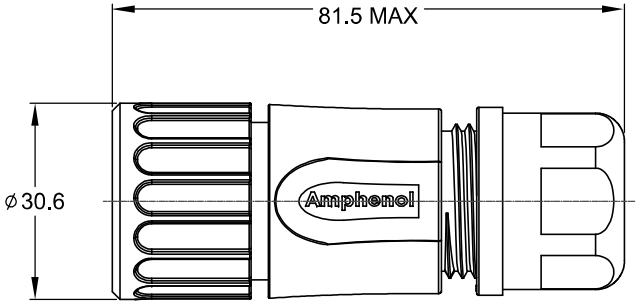

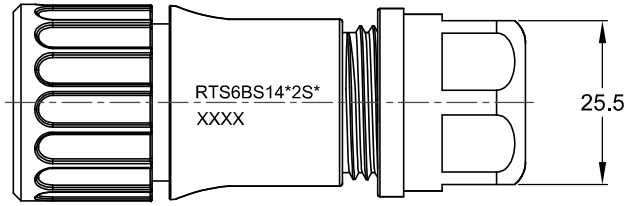

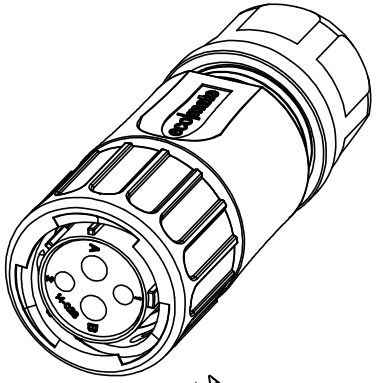

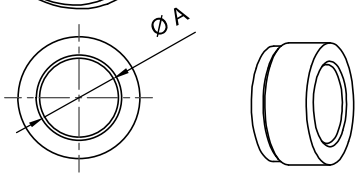

NOTES : (UNLESS OTHERWISE SPECIFIED)

1. MATERIAL :
   SHELL : THERMOPLASTIC , UL94 V-0.
   INSERT : THERMOPLASTIC , UL94 V-0.
   COUPLING NUT : THERMOPLASTIC , UL94 V-0.
   O-RING : NBR OR SILICONE RUBBER.
   WASHER : SILICONE RUBBER.
   BACK SHELL : THERMOPLASTIC , UL94 V-0.
   CLAMP NUT : THERMOPLASTIC , UL94 V-0.
   CLAMP RING : THERMOPLASTIC , UL94 V-0.
   CABLE SEAL : EPDM.
2. SPECIFICATIONS :
   2.1 RATED CURRENT : 2.5MM CONTACT @ 23A (MAX). 16# CONTACT @ 13A (MAX). 2.2 RATED VOLTAGE : 500V(AC/DC).
   2.3 OPERATING TEMPERATURE : SEE CHART .
   2.4 DIELECTRIC WITHSTANDING VOLTAGE : LESS THAN 2 MILLIAMPS CURRENT LEAKAGE@2000 VOLTS AC. 2.5 INSULATION RESISTANCE : 5000 MEGOHMS MIN. 2.6 IP CLASS : IP67 AND IP69K.
   2.7 MATING CYCLES DURABILITY : 500 CYCLES MIN. 2.8 RoHS COMPLIANT.
3. SUITABLE CONTACTS : 2.5MM CONTACT
   16# CONTACT .
4. ALL DIMENSIONS ARE FOR REFERENCE USE ONLY.

DIMENSION ØA	CABLE OD RANGE
12.3MM	7.0-12.0MM
14.3MM	9.0-14.0MM

KEY	PART NUMBER	
	-40°C ~ +105°C	-40°C ~ +125°C
N	RTS6BS14N2S	RTS6BS14N2S03

QUANTITY	PART NUMBER	DESCRIPTION	ITEM

MATERIALS LIST

UNLESS OTHERWISE SPECIFIED
1) All dimensions are in metric(mm).
2) Tolerances are as follows:
2 PL DEC ±0.15 | Fractions ±1/64
3 PL DEC ±0.08 | Angles ±1°
3) Note reference = X

MATERIAL SPECIFICATIONS:

PROCESS SPECIFICATIONS:

NEXT ASS'Y:

SIGNATURES		DATE
DRAWN:	Nick	Aug-24-2017
CHECKED:	Tod	Aug-24-2017
ENGINEER:		
APPROVAL:	Tommy	Aug-24-2017
CUSTOMER:		

THIS DRAWING IS SUPPLIED FOR INFORMATION ONLY. DESIGN FEATURES, SPECIFICATIONS AND PERFORMANCE DATA SHOWN HEREON ARE THE PROPERTY OF THE AMPHENOL CORPORATION. NO RIGHTS OF REPRODUCTION ARE IMPLIED. ALL DIMENSIONS ARE SUBJECT TO NORMAL MANUFACTURING VARIATIONS.

Amphenol
Sine Systems - www.amphenol-sine.com
44724 Morley Drive
Clinton Township, MI 48036

ECO-MATE,PLUG,BACK SHELL,
SIZE 14,2+2POS,SOCKET

SIZE	TYPE	DWG NO:	REVISION
B	C-	RTS6BS14*2S*	A3

SCALE: NONE SHEET 1 OF 1

TITLE: ECO-MATE,PLUG,BACK SHELL,SIZE 14,2+2POS,SOCKET
DWG NO: RTS6BS14*2S*
REV: A3
SH: 1
OF: 1