POLARIZATION CHART				
KEYING LETTER	F DEGREES	G DEGREES	H DEGREES	COLOR BAND
T	100°	150°	110°	RED
U	120°	130°	110°	ORANGE
V	115°	130°	115°	YELLOW
W	125°	110°	125°	GREEN
X	130°	100°	130°	BLUE
Y	110°	140°	110°	VIOLET
Z	100°	160°	100°	GRAY
S	135°	135°	90 °	WHITE
NONE	120°	120°	120°	NONE

DATA CONTAINED IN THIS DOCUMENT IS PROPRIETARY TO TROMPETER ELECTRONICS INC. AND SHALL NOT BE DISCLOSED, COPIED OR USED FOR PROCUREMENT OR MANUFACTURE WITHOUT EXPRESS WRITTEN PERMISSION OF TROMPETER ELECTRONICS INC.

REVISIONS		3-0057	SH 1
REV	DESCRIPTION	DATE	APPROVED
G	REVISED PER ECO 14834	12-5-02	AAh

RED INDICATES ORIGINAL

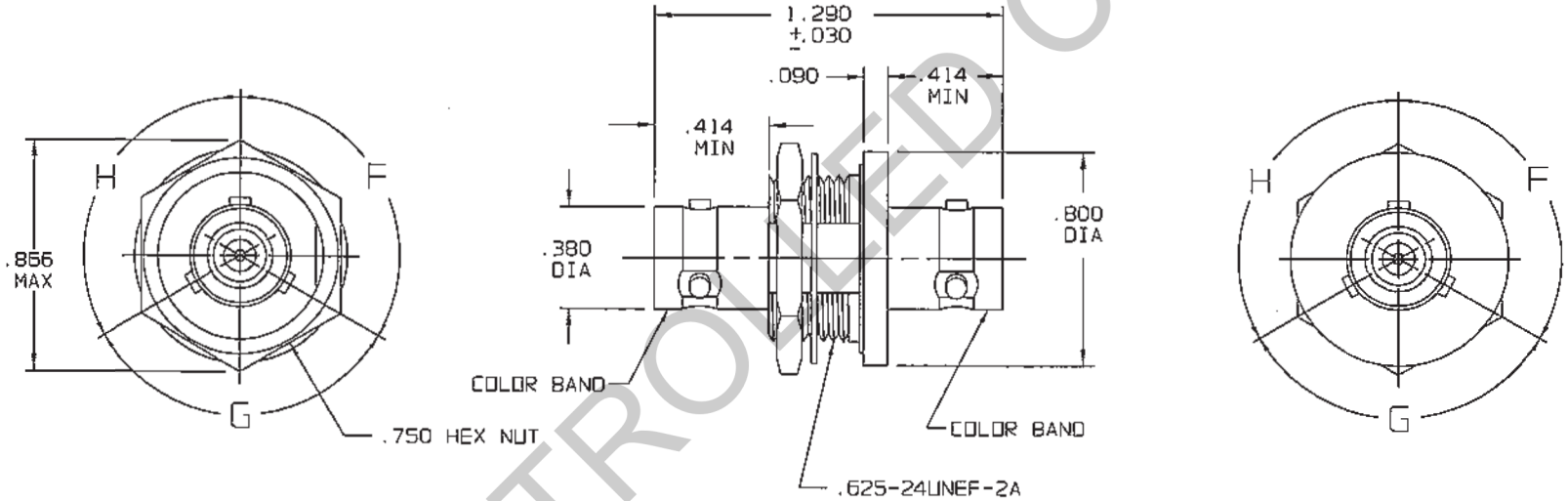

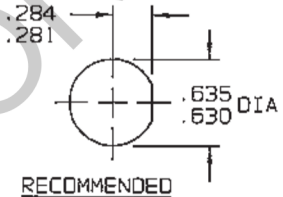

RECOMMENDED PANEL CUTOUT
SCALE: NONE

5. EXAMPLE OF COMPLETE MODEL NO: BJ73 T
   BASIC MODEL NO
   POLARIZATION LETTER
4. CONCENTRIC TWINAX/TRIAX 3-LUG BAYONET FEED THRU INSULATED BULKHEAD RECEPTACLE
3. MAX PNL THK .187
2. FINISH: TFS-1A (NICKEL)
1. ALL DIM ARE IN INCHES

INTERPRET DRAWING PER MIL-STD-100. DIMENSIONS ARE IN INCHES AND INCLUDE FINISH THICKNESS UNLESS OTHERWISE SPECIFIED	TOL: UNLESS SPECIFIED .XX .XXX ± .005 .XXXX ANGLES	TROMPETER RF connectivity — a cinch connectivity solutions brand	
DRAWN AAH / DATE 12-2-02	MATERIAL:	TITLE: BJ73	
CHECKED / 12/4/02			
QUALITY MN / 5 DEC 02	FINISH:	SIZE A / CAGE CODE 14949 / DRAWING NO. 3-0057	REV. G
MANUF / 12/5/02			
APPROVED / 12/4/02			
NEXT ASSY / CAD FILE NO. 3-0057G	DO NOT SCALE DWG	SCALE NONE / DATE: 2-5-81	SHEET 1C

UNCONTROLLED COPY